PERFORMANCE TREADMILLS

TRUE FITNESS

SCAN FOR UP-TO-DATE OWNER'S MANUAL

SCAN FOR ASSEMBLY VIDEO

MODEL TPS1001-35/TPS3001-35/TPS8001-35
MAN-TPS-35 REV07

OWNER'S MANUAL

TRUE FITNESS

IMPORTANT—PLEASE READ

All products shown are prototype. Actual product delivered may vary. Product specifications, features, and software are subject to change without notice.

For the most up-to-date version of this manual, please see our website:
https://shop.truefitness.com/customer-service/user-manuals/

CONTACTING OUR SUPPORT TEAM

To contact TRUE for any of your pre or post installation questions, please call our toll-free numbers Monday - Friday during normal business hours:

- Commercial Direct Customers and Corporate Accounts | 800.868.8783
- Retail Customers and Distributors | 800.883.8783

Or email us:

- Commercial Direct Customers and Corporate Accounts | service.direct@truefitness.com
- Retail Customers and Distributors | service@truefitness.com
- Service International | int.service@truefitness.com

When contacting TRUE, please have the following information ready:

- Serial Number of Unit
- Contact Information—Full Name, Email, and Phone Number
- Address of Facility or Residence
- Detailed Description Regarding Symptom of the Unit (along with pictures or video if applicable)

NOTE: Authorized service providers, dealers, and distributors may also use TRUE's online resource | portal.truefitness.com.

CONTACTING OUR SALES TEAM

Interested in owning more TRUE products? Please contact us with any product inquires so that we may direct you to the appropriate sales representative to help answer your questions.

- Phone | 800.426.6570
- Email | sales@truefitness.com

REPORTING FREIGHT CLAIMS OR PARTS DAMAGE

Unfortunately, sometimes materials can be damaged during shipment. If materials are damaged during shipment, please follow the guidelines below to determine the appropriate process for you to follow.

Severe Damage—Obvious damage to external packaging and internal product.

Please refuse the shipment and it will be returned to TRUE by the carrier. Contact TRUE product support by calling 800.883.8783 or sales support by calling 800.426.6570 Monday-Friday during normal business hours to notify us that the shipment has been refused. Once we have received the damaged shipment, a replacement shipment will be sent to you. If the shipment comes in multiple boxes, only refuse boxes with damage.

Slight Damage—Minimal damage to external packaging with unknown internal damage to product.

If the shipment has minimal damages and you are not sure if the actual product is damaged, you must sign the bill of lading as damaged when accepting the shipment. Once you have opened the box and you have determined something is indeed damaged, please gather the serial number, model number, description of damage, and photos of damage. Please make sure the photos include the damaged product as well as the damaged box the product arrived in. Contact TRUE product support (service@truefitness.com | 800.883.8783) or TRUE sales support (sales@truefitness.com | 800.426.6570) Monday-Friday during normal business hours.

Concealed Damage—No damage to external packaging but internal damage to product.

You may receive a shipment that looks intact and discover once the box has been opened that there are hidden damages. Please notify the carrier immediately. TRUE will not be able to file a claim if the carrier is not notified in a timely manner. Once you have called the carrier you will need to gather the serial number, model number, description of damage, and photos of damage. Contact TRUE product support (service@truefitness.com | 800.883.8783) or TRUE sales support (sales@truefitness.com | 800.426.6570) Monday-Friday during normal business hours.

TRUE FITNESS

TABLE OF CONTENTS

SAFETY INSTRUCTIONS

IMPORTANT SAFETY INSTRUCTIONS—SAVE THESE INSTRUCTIONS....5
POWER REQUIREMENTS....7
GROUNDING INSTRUCTIONS....7
SPACE REQUIREMENTS....8
SPECIFICATIONS....8
WARNING DECALS....9
COMPLIANCES....9
PROPER USE....10

ASSEMBLY INSTRUCTIONS

PREASSEMBLY CHECKLIST....11
ASSEMBLY STEPS....16

PRODUCT FEATURES

BASE OVERVIEW....26
CONSOLE OPTIONS....27

CARE AND MAINTENANCE

INSPECTION....28
CLEANING THE EQUIPMENT....28
LEVELING THE EQUIPMENT....28
ADJUSTING THE EQUIPMENT....29
PREVENTATIVE MAINTENANCE....31
LONG TERM STORAGE....31

ADDITIONAL INFORMATION

TROUBLESHOOTING....32
WIRING DIAGRAM....35

WARRANTY INFORMATION

LIMITED WARRANTY....36
WARRANTY DETAILS....37
WARRANTY REGISTRATION....38

SAFETY INSTRUCTIONS

IMPORTANT SAFETY INSTRUCTIONS—SAVE THESE INSTRUCTIONS

This equipment intended for in-home use only. Do not use this product in any commercial, rental, school or institutional setting.

- Read and understand all instructions and warnings prior to use.
- Obtain a medical exam before beginning any exercise program. If at any time during exercise you feel faint, dizzy, or experience pain, stop and consult your physician.
- Obtain proper instruction prior to use.
- For indoor use only. Do not use outdoors.
- This unit is intended for in-home use only.
- Inspect the unit for incorrect, worn, or loose components and do not use until corrected, replaced, or tightened prior to use.
- Do not wear loose or dangling clothing while using the unit.
- Care should be used when mounting or dismounting the unit.
- Read, understand, and test the emergency stop procedures before use.
- Disconnect all power before servicing the unit.
- Do not exceed maximum user weight of 350 lbs / 159 kg.
- Keep the top side of the moving surface clean and dry.
- Keep children and animals away.
- Use caution when moving and assembling unit.
- All exercise equipment is potentially hazardous. If attention is not paid to the conditions of equipment usage, death, or serious injury could occur.

DANGER: To reduce the risk of electric shock, always unplug this product when not in use, before cleaning, or attempting any maintenance activity. Do not handle the plug with wet hands.

WARNING: Heart rate monitoring systems may be inaccurate. Over exercising may result in serious injury or death. If you feel faint, stop exercising immediately.

WARNING: To reduce the risk of burns, fire, and electric shock or injury to persons, follow these instructions:

- Health related injuries may result from incorrect or excessive use of exercise equipment.
- TRUE STRONGLY recommends seeing a physician for a complete medical exam before undertaking an exercise program, particularly if the user has a family history of high blood pressure or heart disease, is over the age of 45, smokes, has high cholesterol, is obese or has not exercised regularly in the past year. Additionally, TRUE recommends consulting a fitness professional on the correct use of this product.
- Equipment should be immediately taken out of use if it fails to work properly or when a warning is presented electronically.
- When using this exercise machine, basic precautions should always be followed.
- Use this equipment only for its intended use as described in this manual.
- Do not move the equipment by lifting the console. Do not use the console as a handlebar during a workout.
- This product can expose you to chemicals including Toluene and Acrylamide which are known to the State of California to cause Cancer and birth defects or other reproductive harm. For more information, go to www.P65Warnings.ca.gov.
- Keep equipment stable on flat ground.
- Risk of personal injury-crushing hazard when equipment is in operation. Keep feet, hands, and fingers away from moving parts.
- Replace warning labels that may be worn, damaged, or missing.
- Replace any non-working or damaged components, remove the unit from service until repair is performed.
- Do not operate the equipment while being covered with a blanket, pillow, plastic, or anything that insulates or stops airflow. Keep air openings free of lint, hair or any obstructing material.
- To avoid serious injury, remove and store the power cord when the machine is not in use.
- This appliance should never be left unattended when plugged in.
- Do not use any type of extension cord with this product.
- Never operate a TRUE product if it has a damaged power cord or electrical plug, or if it has been dropped, damaged, or even partially immersed in water.

- Use a TRUE AC power cord or AC/DC adapter only.
- Position this product so the power cord plug is accessible to the user.
- Keep the power cord away from heated surfaces. Do not pull the equipment by the power cord or use the cord as a handle. Do not run the power cord along the side or under the equipment.
- If the electrical supply cord is damaged it must be replaced by the manufacturer, an authorized service agent, or a similarly qualified person to avoid a hazard.
- This product must be connected to a properly grounded electrical outlet.
- To disconnect, turn power OFF at the ON/OFF switch if applicable, then remove plug from electrical outlet. On the machine power switch, (|) means that the machine power is **ON** and (◎) means the machine power is **OFF**.

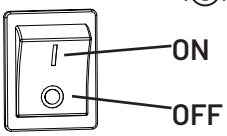

- Never insert objects into any openings in this product. If an object should drop inside, turn off the power, unplug the power cord from the outlet and carefully retrieve it. If the item cannot be reached, contact TRUE product support.
- Any changes or modifications to this equipment could void the product warranty.
- Do not use this product in areas where aerosol spray products are being used or where oxygen is being administered. Such substances create the danger of combustion and explosion.
- Do not use this product outdoors, near water, while wet, or in areas of high humidity including extreme temperature changes.
- Close supervision is necessary when used near children under the age of 15, or disabled persons.
- This equipment is not intended for use by persons with reduced physical, sensory, or mental capabilities, or lack of experience and knowledge, unless they are supervised or have been given instruction concerning use of the equipment by a person responsible for their safety.
- Children shall not play with the appliance.
- Cleaning and user maintenance shall not be made by children without supervision.
- Wear shoes with rubber or high traction soles. Do not use shoes with heels, leather soles, cleats or spikes. Make sure no stones are embedded in the soles. Do not use this product in bare feet. Keep all loose clothing, shoelaces and towels away from moving parts.
- To avoid injury, attach the safety clip to clothing before use.
- When mounting the treadmill, ensure the treadmill belt is not running.
- Use handlebars to maintain balance when mounting and dismounting the treadmill and for additional stability while exercising.
- To avoid injury, stand on the side rails before starting the equipment.
- While the treadmill is in use, proceed at a speed that the user can safely maintain with the ability to immediately engage the safety key to stop the treadmill belt if necessary.
- Avoid the possibility of bystanders being struck or caught between moving parts by making sure that they are out of reach of the equipment while it is in motion.
- Do not use typing or web surfing features at excessive speeds. Always stabilize yourself when using typing or web surfing features. (Varies by console option.)
- Never place liquids of any type directly on the unit except in the accessory tray or bottle holders. Containers with lids are recommended.
- Always follow the console instructions for proper operation.
- Do not use the contact heart rate grips as a handlebar during a workout.
- Avoid exiting equipment while leaving the tread belt in motion.
- Never walk or jog backwards on the equipment.
- Allow only one person at a time on the equipment while it's operating.
- Do not allow animals on or near the equipment while in operation.
- To avoid serious injury, do not touch the incline rack while the equipment is in use.

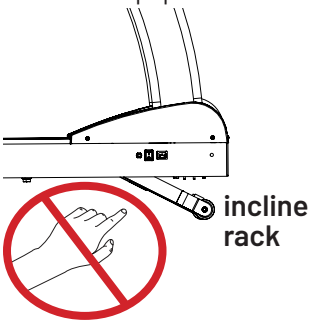

- To avoid serious injury, do not touch the belt while the equipment is in use.

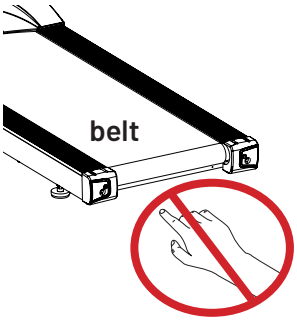

- Do not reach into or underneath the unit, or tip it on its side during operation.
- Do not use if you have a cold or fever.
- Do not change the incline of the equipment by placing objects under it.
- Do not use attachments not recommended by the manufacturer.
- Allow only trained personnel to service this equipment.

- It is the sole responsibility of the owner/operator to ensure regular and scheduled maintenance is performed.
- Do not remove the motor cover or you may risk injury due to electric shock. Please contact TRUE product support if the motor area needs servicing.
- Noise emission under load is higher than without load. A-weighted emission sound pressure level at the trainer's ear: 67 dBA.

POWER REQUIREMENTS

Read and understand all instructions before plugging any TRUE power cord into an electrical outlet.

DEDICATED LINE

This product requires a dedicated line without GFCI (Ground-Fault Circuit Interrupter) or AFCI (Arc-Fault Circuit Interrupter). GFCI and AFCI protection is not required for receptacles on a dedicated branch circuit located and identified for a cord-and-plug-connected appliance, such as a treadmill. A dedicated line assures that adequate power is available for safe operation over the life of your TRUE product.

GROUNDING INSTRUCTIONS

This product must be grounded. If the product malfunctions or breakdowns, grounding provides a path of least resistance for electric current to reduce the risk of electric shock. This product is equipped with a cord having an equipment grounding conductor and a grounding plug. The plug must be plugged into an appropriate outlet that is properly installed and grounded in accordance with all local codes and ordinances.

⚠ DANGER:

- Improper connection of the equipment grounding conductor can result in risk of electrical shock.
- Check with a qualified electrician or service provider if you are in doubt as to whether the equipment is properly grounded or installed on a dedicated line.
- Seek a qualified electrician to perform any modifications to the cord or plug. TRUE is not responsible for injuries or damages as a result of cord or plug modification.
- To reduce the risk of burns, fire, electric shock, or injury, it is imperative to connect each product to a properly grounded 110V or 220V electrical outlet. The voltage required for your unit is located on the serial number decal (usually on the front of the unit). Depending on where you live voltage requirements differ.
- Some TRUE products require a circuit rated 110V, 60 Hz, and 20 amps. In the United States, most residential homes have circuits rated 110V, 60 Hz, and 15 amps. If your unit requires a 20 amp outlet, contact an electrician to install a dedicated 20 amp circuit prior to use.
- **110 Volt—**This model is for use on a nominal 110V circuit and has a grounding plug that looks like the plug illustrated below. Make sure the product is connected to an outlet having the same configuration as the plug. No adapter should be used with this product.

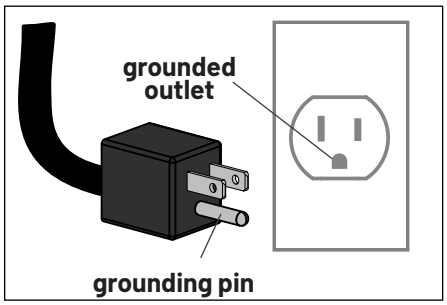

Power Information						
Model	**Line Voltage (V)**	**Frequency (Hz)**	**Rated Current (Amps)**	**Number of Units per Circuit**	**Plug/Outlet**	**Max Power Dissipation (Watt)**
TPS1001-35/3001-35/8001-35	110	50/60Hz	15	Dedicated 1	NEMA 5-15 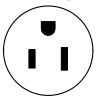	1230

TRUE FITNESS

SPACE REQUIREMENTS

TRUE recommends leaving a minimum of 24" (61cm) on each side of the equipment and a 79" (200cm) safety zone at the rear of the equipment.

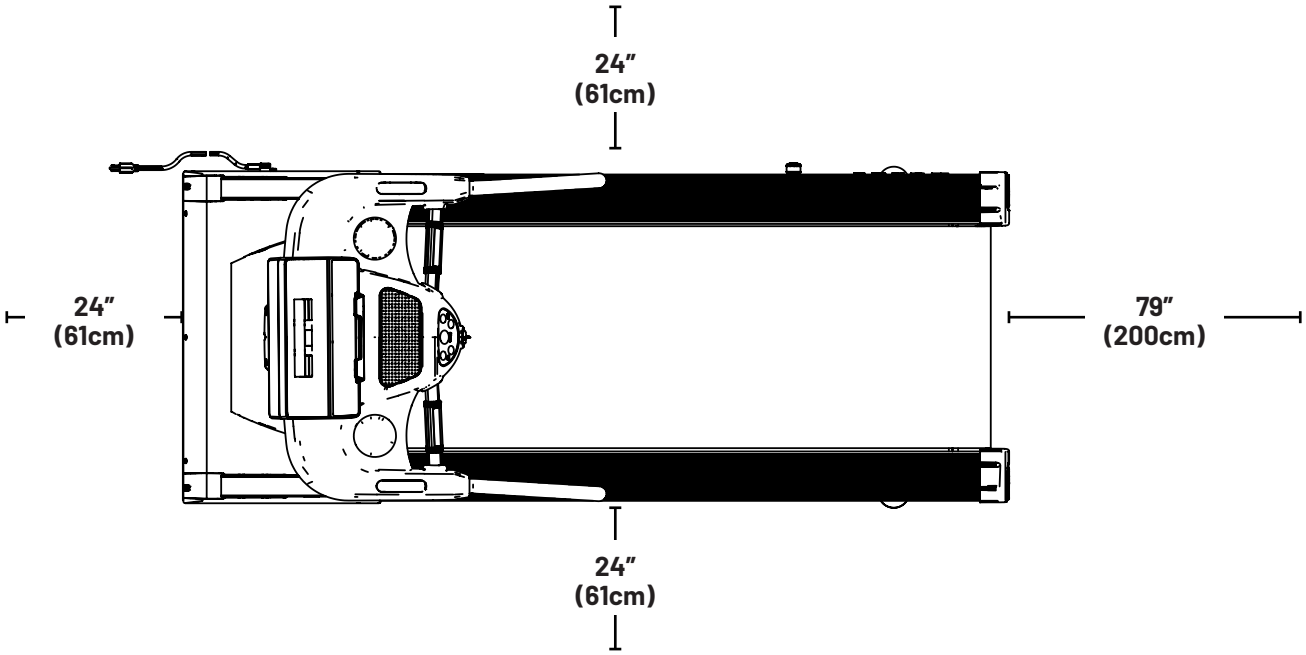

SPECIFICATIONS

- **DIMENSIONS (L X W X H)**
  79" x 33.5" x 53" / 200 cm x 85 cm x 135 cm
- **MACHINE WEIGHT**
  297 lbs / 135 kg
- **MAXIMUM USER WEIGHT**
  350 lbs / 159 kg

WARNING DECALS

⚠ **WARNING:** Replace warning labels that may be worn, damaged, or missing.

To replace any worn or missing decals contact TRUE product support (service@truefitness.com | 800.883.8783).

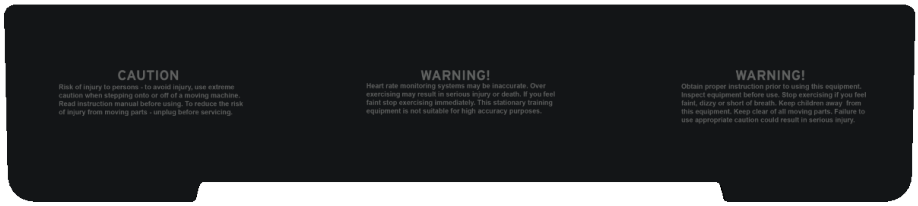

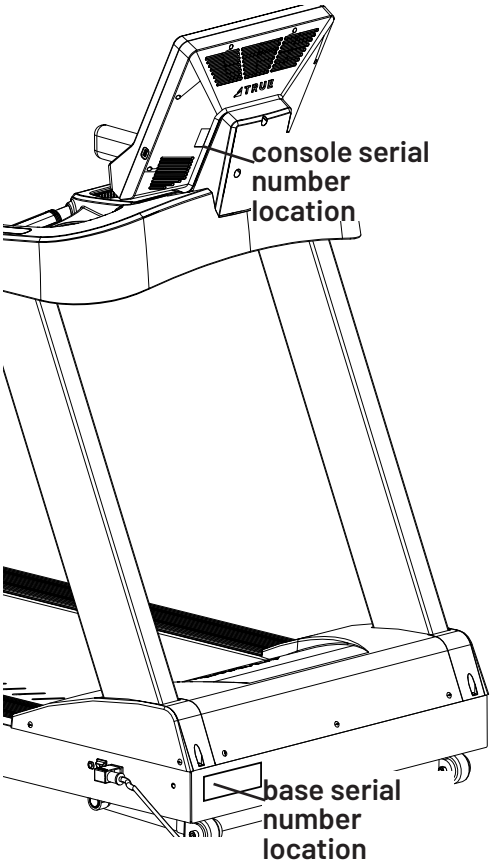

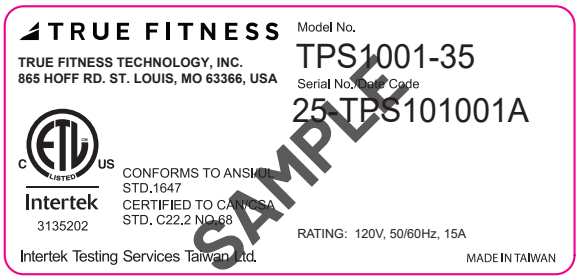

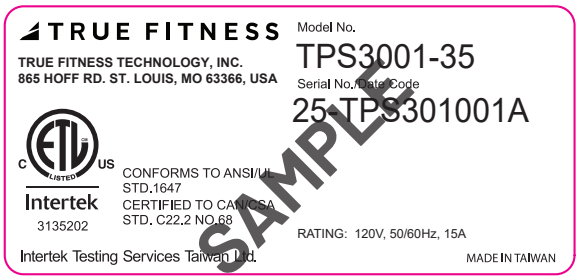

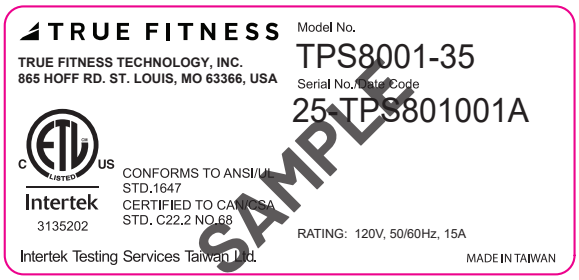

COMPLIANCES

This equipment complies with all applicable codes and regulations. For a complete list of compliances, please visit www.truefitness.com.

PROPER USE

HOW TO USE THE SAFETY KEY

The safety key is a tethered device that attaches to the user and the treadmill. Removal of the safety key from the treadmill will stop belt motion to prevent injury if the user is unable to continue.

A. Attach the safety clip to your clothing before each workout and when treadmill is in use.
B. Attach the magnetic safety key to the treadmill.

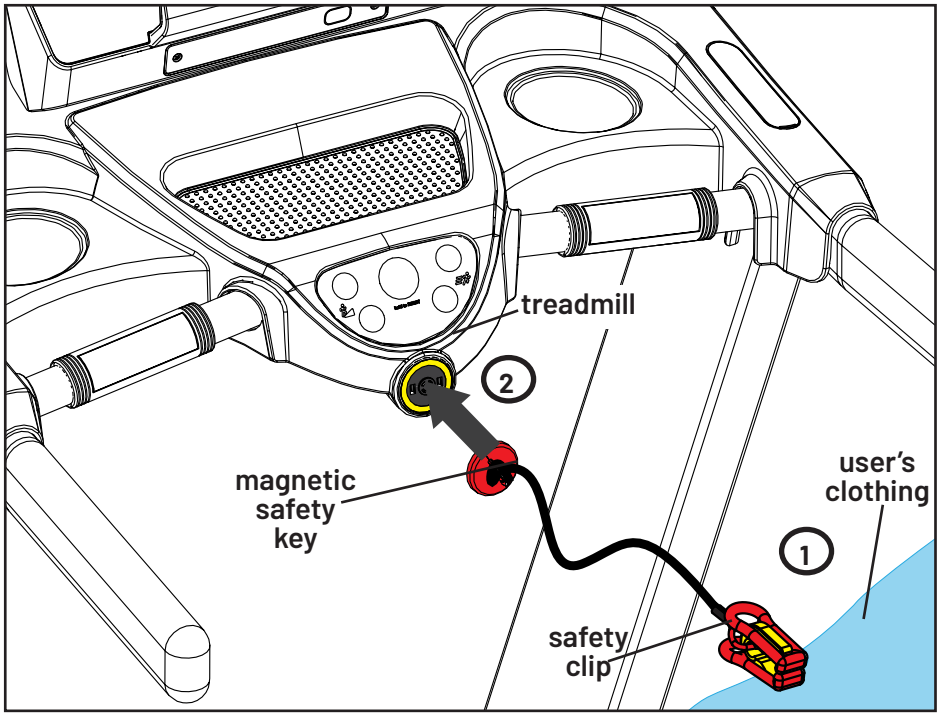

⚠CAUTION:

To prevent potential injury to the user, the safety key must be attached to the treadmill and clipped to the user. The machine will not operate if the safety key is not attached to the treadmill.

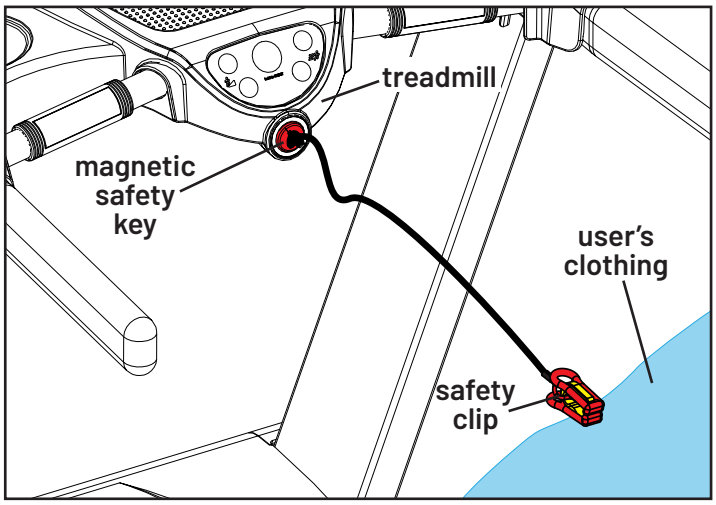

ASSEMBLY INSTRUCTIONS

NOTE: Supplemental video available **@TRUEFitnessservicevids**.

PREASSEMBLY CHECKLIST

BASIC GUIDELINES FOR SETTING UP THE EQUIPMENT

After removing the equipment from the packaging, place the equipment on a clean, level surface. Make sure the electrical cord easily reaches a grounded three-pronged outlet.

DANGER: Do not use an extension cord or ungrounded outlet. The ground helps prevent electrical damage to your equipment and enhances your safety by helping to prevent shock. Check with a qualified electrician or serviceman if you are in doubt as to whether the equipment is properly grounded. Do not modify the plug provided with the unit if it will not fit the outlet. Have a proper outlet installed by a qualified electrician.

CAUTION:

Use caution when assembling the equipment.
Unpacking and assembling of this product is a two person task.

Use caution when unpacking this product. Avoid damage to the product.
DO NOT use a box cutter. DO NOT slice into the packaging.

VERIFY BOX CONTENTS

IMPORTANT! Please verify box contents. If you have questions, or if there are any missing parts, contact product support (service@truefitness.com | 800.883.8783).

TOOLS NEEDED FOR ASSEMBLY		INCLUDED IN BOX
#2 Phillips Screwdriver		NO
5mm Allen Wrench		YES
17mm Wrench		YES
8mm T-Handle Allen Wrench		YES

TOOLS NEEDED FOR ASSEMBLY		INCLUDED IN BOX
Adjustable Wench		NO
Wire Cutters		NO
Level		NO

TRUE FITNESS

Box Contents		
Part	**Description**	**Qty**
TPS9100B	ASSEMBLY, UPPER, TPS W/ UPPER IO 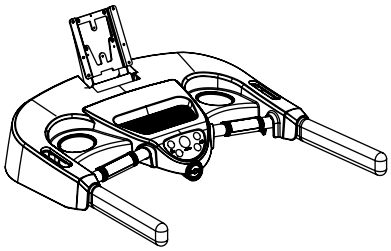	1
TPS*	ASSEMBLY, BASE, TPS* 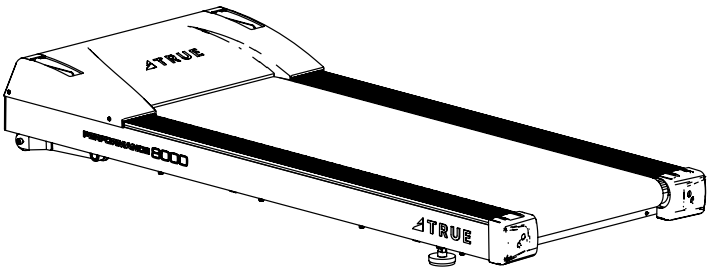 *Base assembly parts for Performance Treadmill models are as follows: • TPS91201-35 | TPS1001-35 • TPS91301-35 | TPS3001-35 • TPS91401-35 | TPS8001-35	1
TPS91501-35	PEDESTAL, RIGHT, TPS, MATTE BLACK 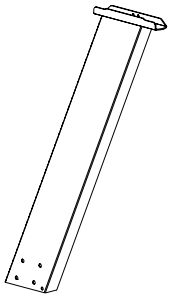	1
TPS91601-35	ASSEMBLY, LEFT PEDESTAL WITH IO CABLE 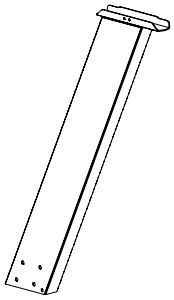	1

Box Contents		
Part	**Description**	**Qty**
TPS9109	COVER, REAR CONSOLE, TPS, BLACK 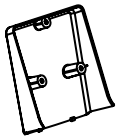	1
RT0136BK	COVER, WIRE, BLACK	1
PS0036A	POWER CORD, RIGHT ANGLE, PS 300CM	1
XM0137	ASSEMBLY, POLAR CHEST STRAP, T34, XHA-T34	1
MAN-TPS	MANUAL, TPS1000/TPS3000/TPS8000 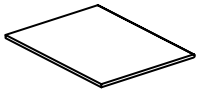	1

TRUE FITNESS

Box Contents		
Part	**Description**	**Qty**
TPS9170B	HARDWARE PACK, TPS1000/TPS3000/TPS8000	1

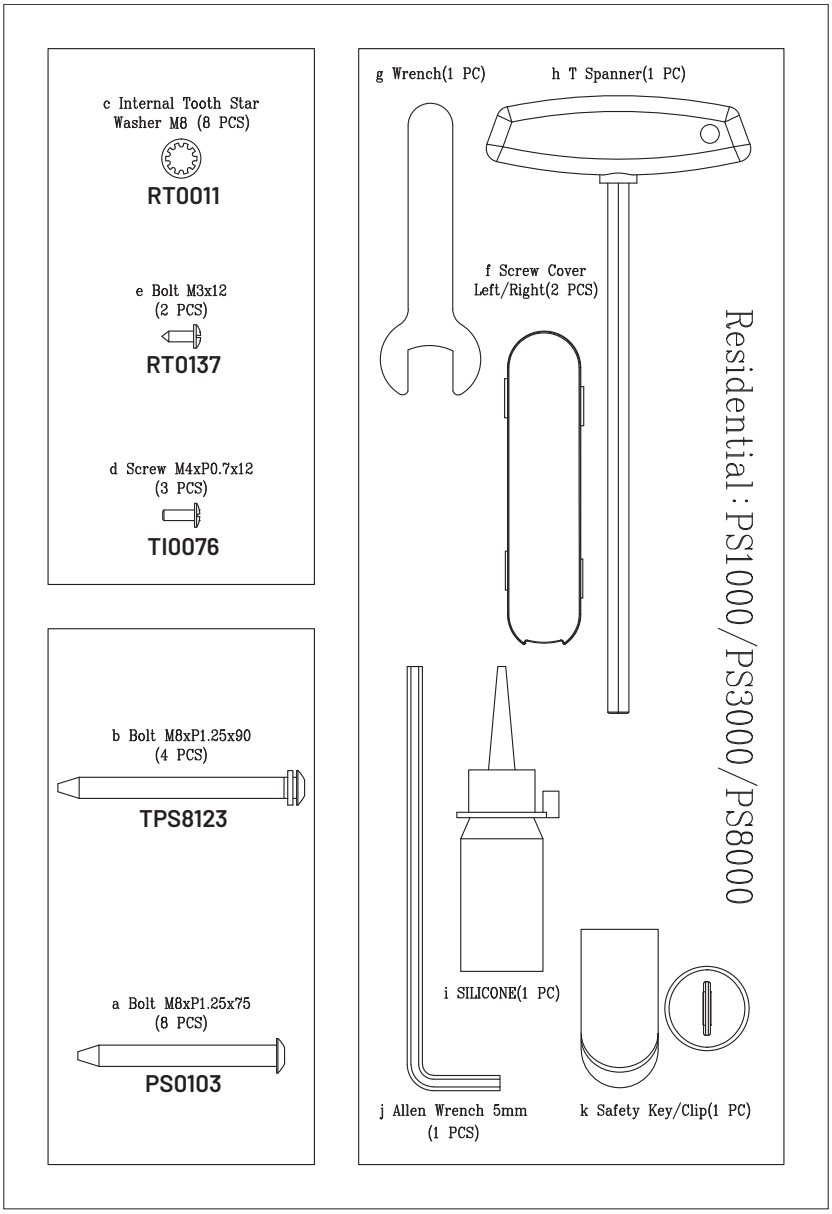

ASSEMBLY STEPS

Step 1—Remove Motor and Pedestal Covers

Tools Used in this Step	
#2 Phillips Screwdriver	

Parts Used in this Step			
Item	**Part**	**Description**	**Qty**
1	PS0035	SCREW, M5XP0.8X15MM SCA5-15	9
2	TPS9501	TRIM, MOTOR HOOD, LEFT, BLACK	1
3	TPS9502	TRIM, MOTOR HOOD, RIGHT, BLACK	1
4	TPS9500	COVER, MOTOR, BLACK	1

A. Remove and set aside the nine (9) screws securing the motor cover and pedestal covers to the treadmill frame.

B. Remove and set aside the covers.

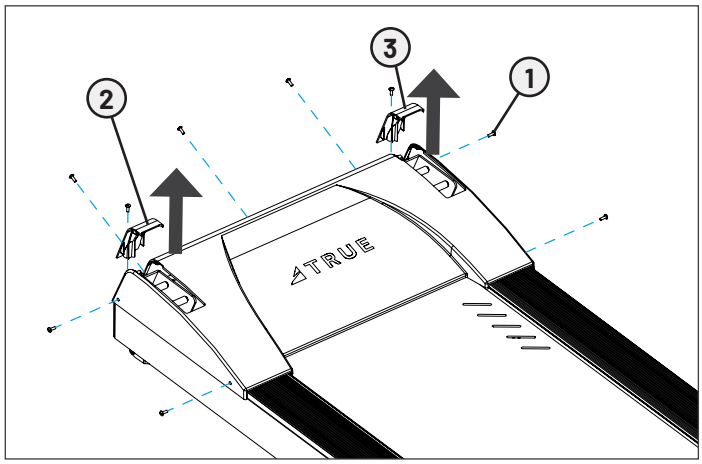

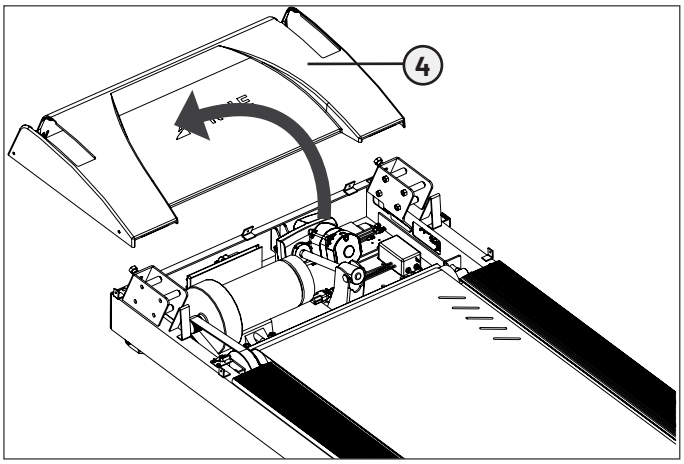

Step 2—Attach Pedestal Assemblies

Tools Used in this Step	
5mm Allen Wrench	
17mm Wrench	

Parts Used in this Step			
Item	Part	Description	Qty
1	PS0103	BOLT, M8 X 75MM, K-298A	8
2	RT0011	LOCK WASHER, INTERNAL TOOTH - SPD8	8
3	TPS91501-35	PEDESTAL, RIGHT, TPS, MATTE BLACK	1
4	TPS91601-35	ASSEMBLY, LEFT PEDESTAL WITH IO CABLE	1

A. Using a 17mm wrench, verify the two bolts on the lower front of the frame are backed out enough so the pedestals can slide into the frame.

B. Slide the left and right pedestals into the frame.

IMPORTANT! Carefully route the cables from the left pedestal through the lower front opening on the frame. DO NOT pinch the cables. Keep all cables away from moving parts inside the machine.

C. Finger tighten or use the 5mm allen wrench to loosely attach the pedestals to the frame.

IMPORTANT! DO NOT fully tighten the hardware until step 5.

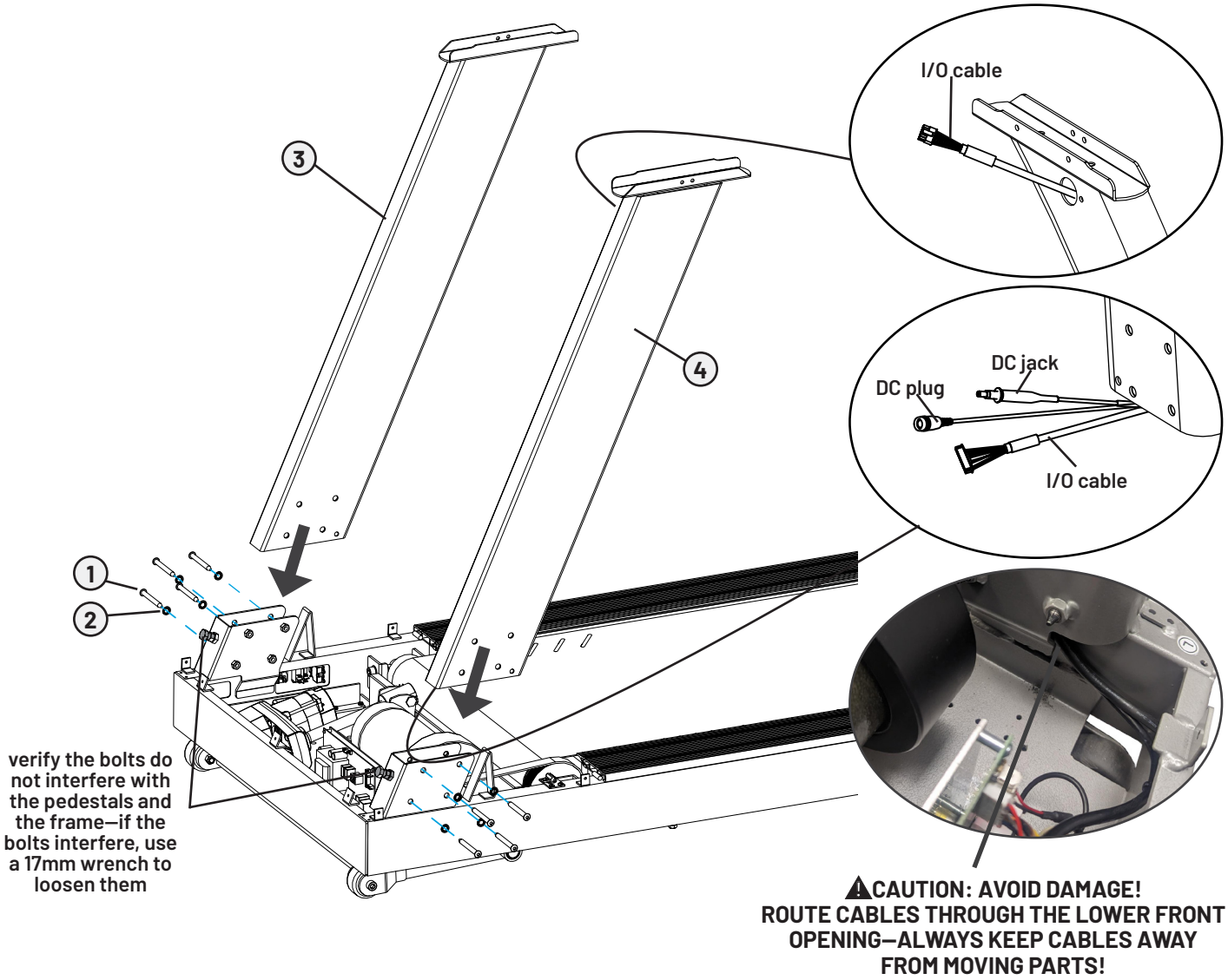

Step 3—Route and Connect Lower Cables

Carefully make the following cable connections between the pedestals and the base:

- I/O Communication Cable to the Lower Control Board
- Power AUXPS Cable Connections:
  - For 8.5" LCD consoles, the auxiliary power supply is not used, connect the DC plug and DC jack and tuck out the way to avoid damage to the cables.
  - For touchscreen consoles, the auxiliary power supply is used, make the DC power connection to the auxiliary power supply and then secure the cables and power supply with zip ties. See page 19 for more information.

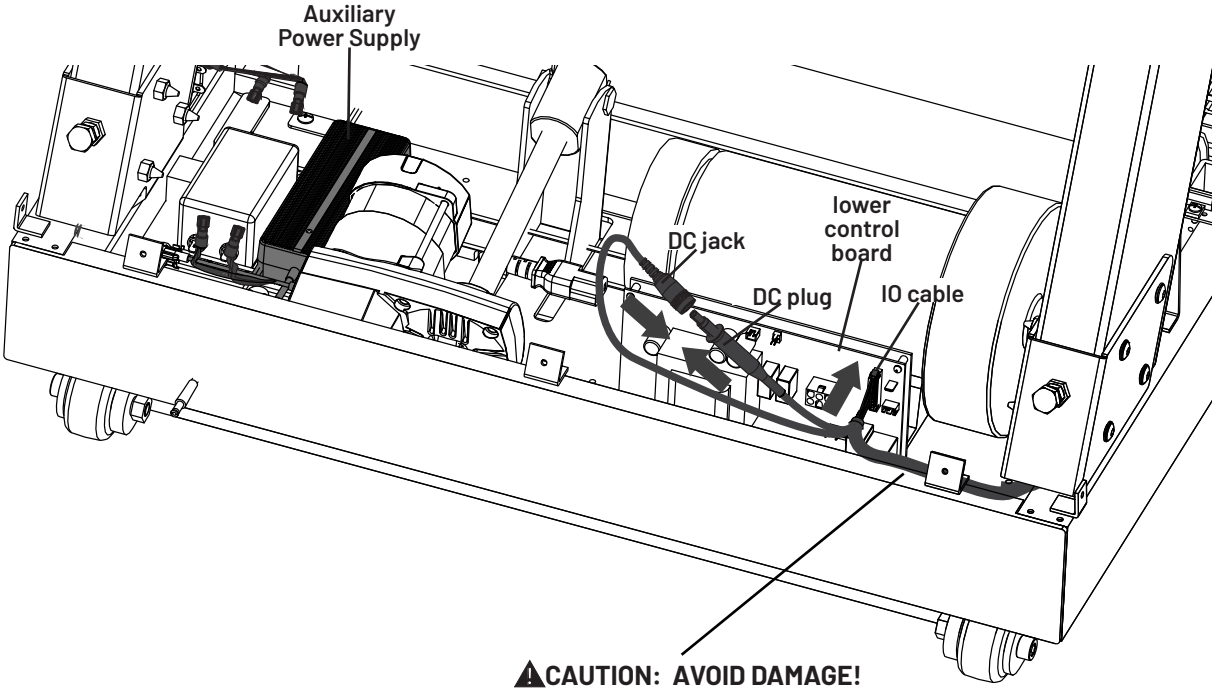

⚠CAUTION: AVOID DAMAGE!
ALWAYS KEEP CABLES AWAY FROM MOVING PARTS!

Step 3—Route and Connect Lower Cables—Auxiliary Power Supply Connections

IMPORTANT! THE AUXILIARY POWER SUPPLY IS NEEDED FOR TOUCHSCREEN CONSOLES

Tools Used in this Step	
Wire Cutters*	

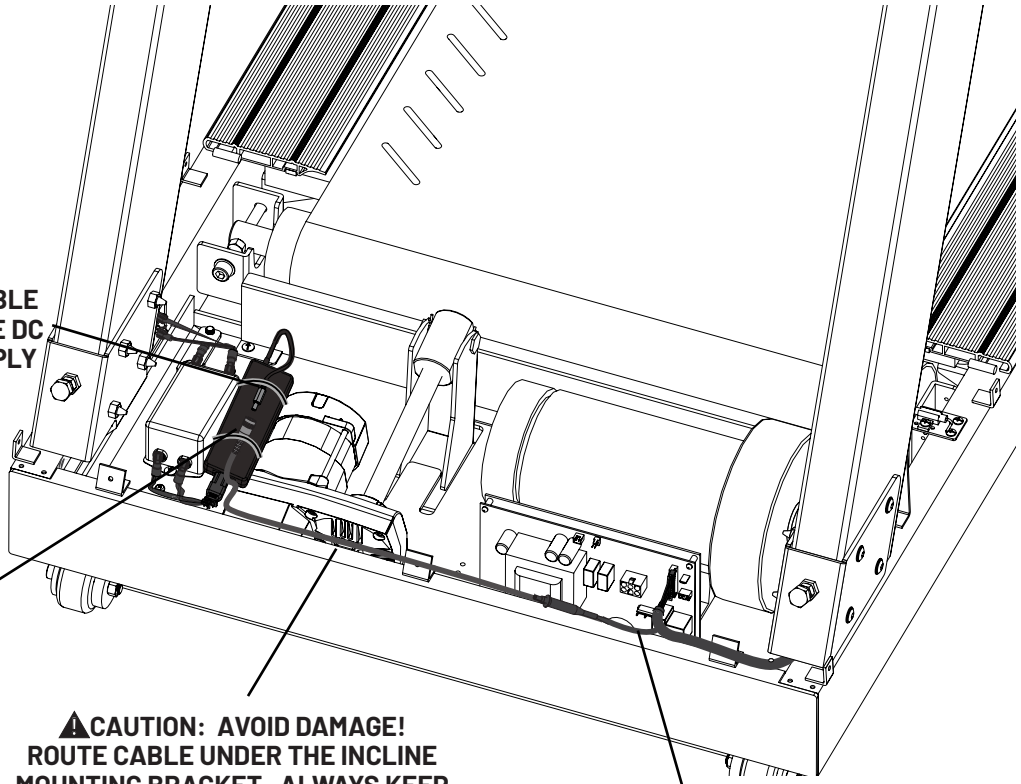

Step 4—Attach the Upper Assembly and Connect Cables

Tools Used in this Step	
5mm Allen Wrench	

Parts Used in this Step			
Item	Part	Description	Qty
1	TPS9100B	ASSEMBLY, UPPER, TPS W/ UPPER IO	1
2	TPS8123	SCREW, M8 X 90MM	4
3	TPS9104	COVER, RIGHT, UPPER , TPS, BLACK	1
4	TPS9105	COVER, LEFT, UPPER, TPS, BLACK	1

A. Carefully place upper assembly onto the left and right pedestals.
IMPORTANT! DO NOT pinch the I/O Communication Cables coming from the upper assembly and the left pedestal.

B. Attach the upper assembly to the pedestals using four (4) M8 screws.

C. Attach the left and right upper covers.

D. Connect the I/O Communication Cables.

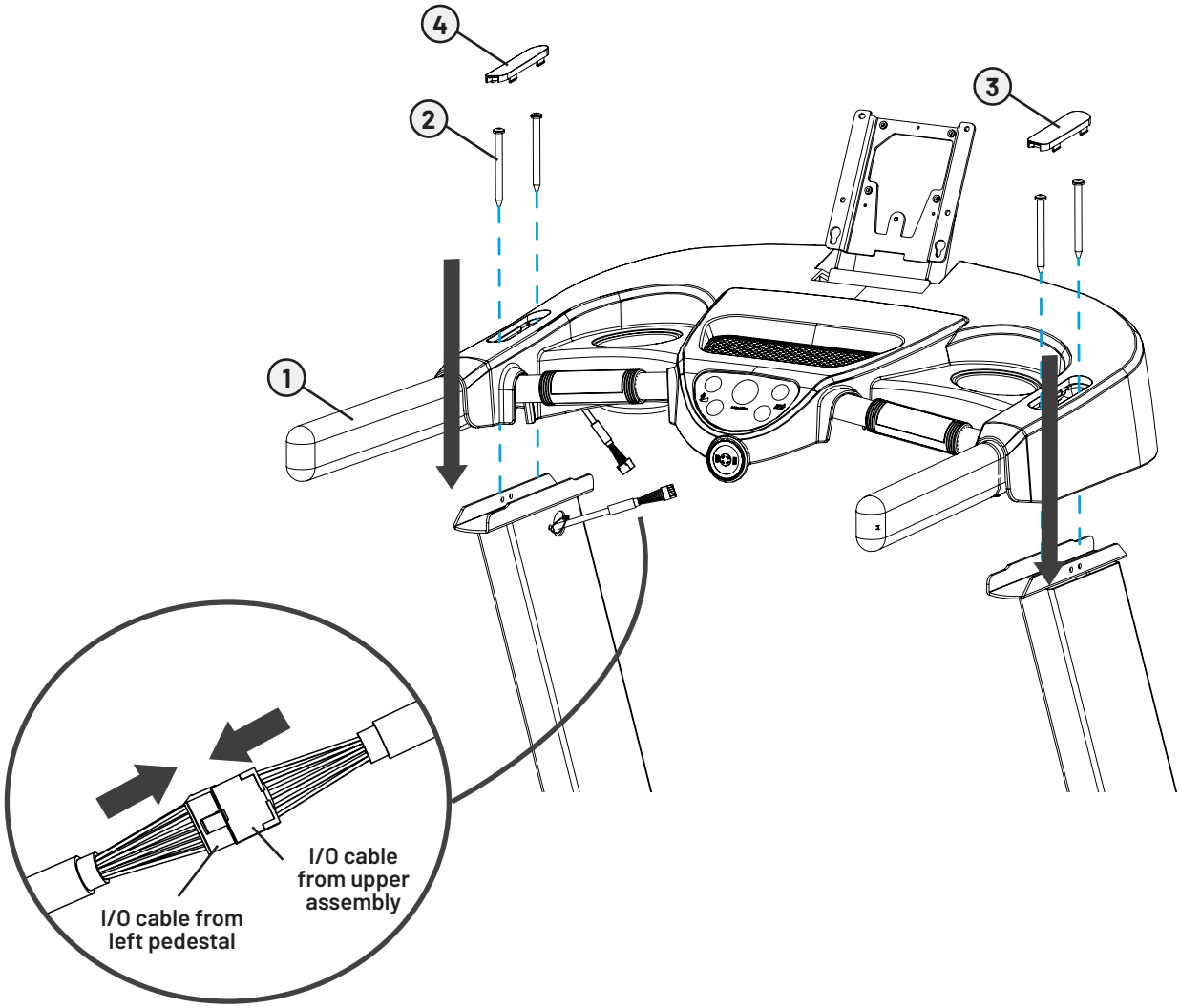

Step 5—Tighten Pedestals

Tools Used in this Step	
5mm Allen Wrench	
17mm Wrench	

Parts Used in this Step			
Item	Part	Description	Qty
1	PS0103	BOLT, M8 X 75MM, K-298A	8
2	TCS4035	BOLT, M10xP1.5x25	2

A. Fully tighten the two (2) bolts on the front of the left and right pedestals.

B. Fully tighten the eight (8) bolts on the sides of the left and right pedestals.

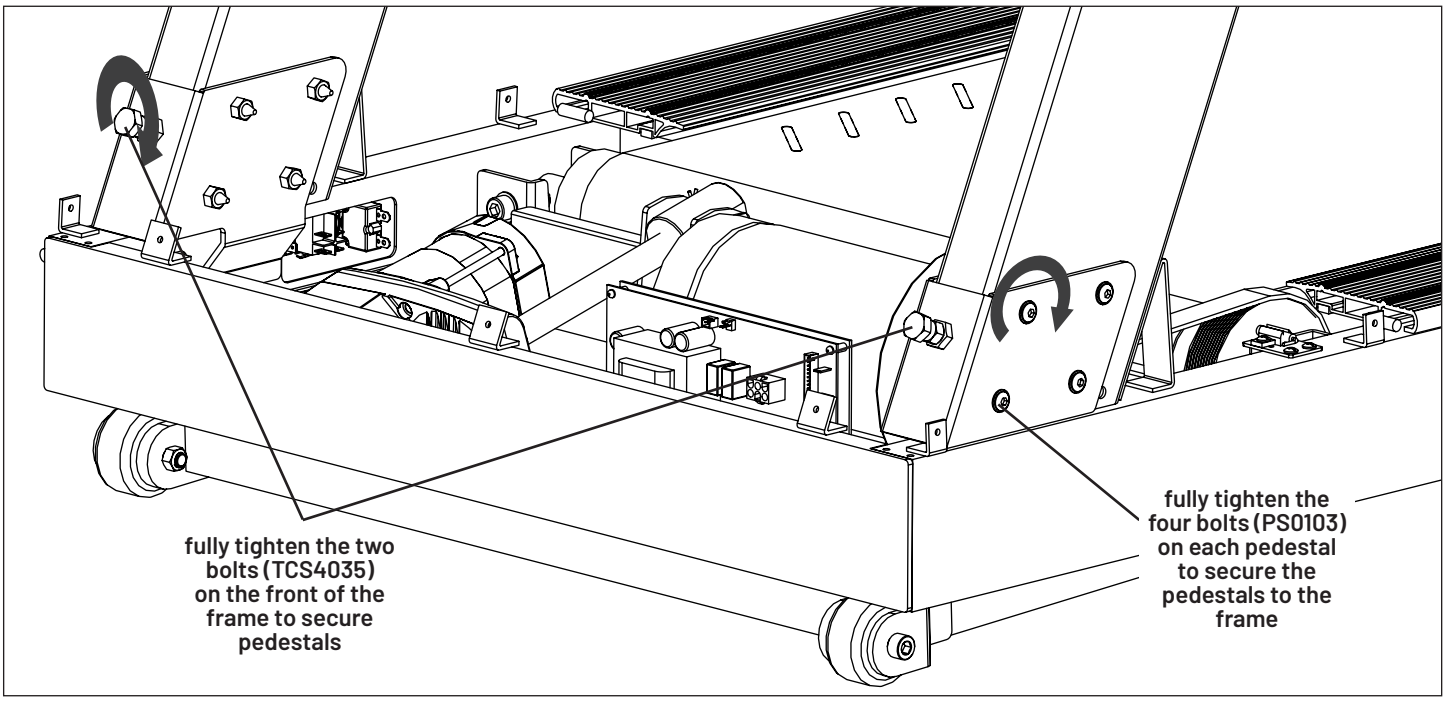

Step 6—Attach Console, Connect Power Cord, Configure, and Calibrate

Tools Used in this Step	
#2 Phillips Screwdriver	

Parts Used in this Step			
Item	**Part**	**Description**	**Qty**
1	N/A	CONSOLE MAST ASSEMBLY	1
2	N/A	CONSOLE	1
3	PS0036A	POWER CORD, RIGHT ANGLE, PS, 300CM	1

A. Using a #2 Phillips screwdriver, secure the console to the console mast using the hardware preassembled to the console (00567800 // SCREW, M5-.8X12 COMBO PHILLIPS/COMMON TRUSS HEAD - ACG BLACK // QTY 4).

NOTE: If the console also has three screws (00567700 // SCREW, M4-.7 X 12 PPHMS SEMS // QTY 3) preassembled, remove and set aside these screws. They are not used in this installation.

NOTE: Loosen but do not remove the bottom two preassembled screws (00567800), those slide into the keyhole slots on the console mast.

B. Connect the console cables and ensure all cables are routed inside the console mast to avoid pinching the cables.

IMPORTANT! Please see the console owner's manual for more detailed information on the console cable connections, machine setup, and use.

C. Connect the power cord into the power inlet and then power on the treadmill.

D. Follow the instructions in the console owner's manual to verify the correct base is configured to the console, and then calibrate the machine.

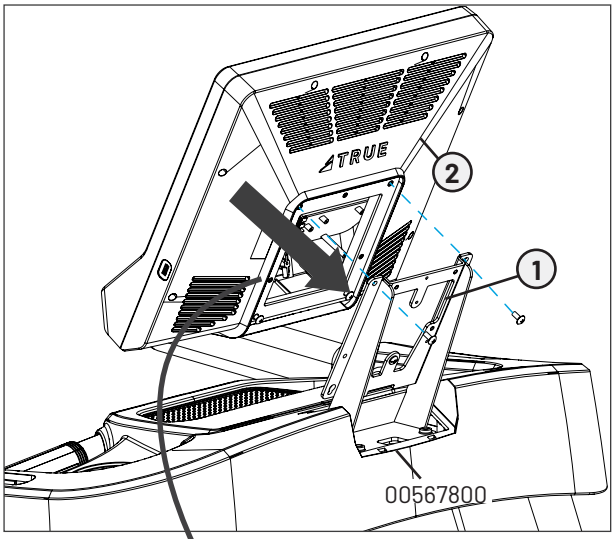

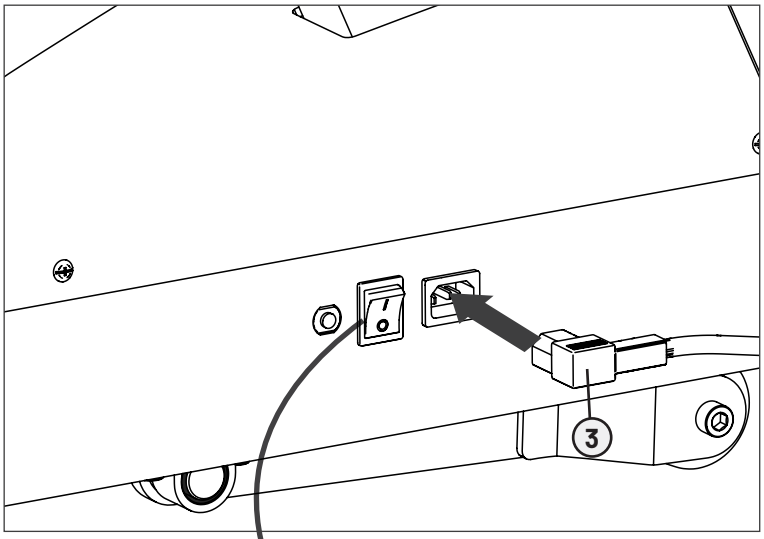

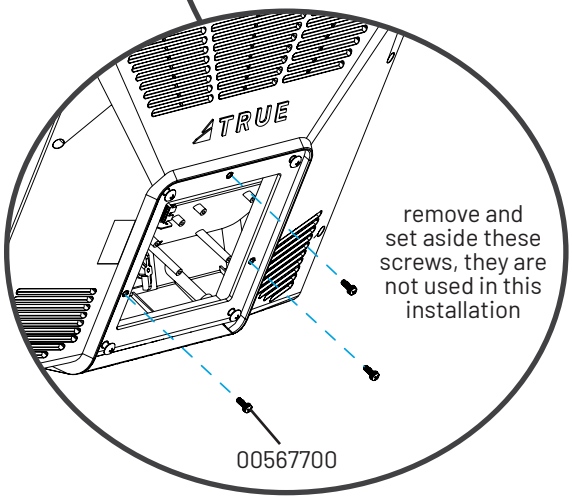

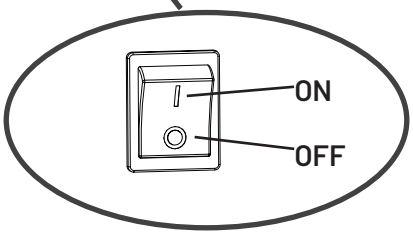

Step 7—Attach Rear Console Cover, Wire Cover, Motor Cover, and Cap Covers

Tools Used in this Step	
#2 Phillips Screwdriver	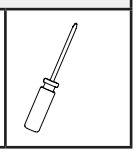

Parts Used in this Step			
Item	Part	Description	Qty
1	TI0076	PHCS, M4XP0.7X12	3
2	TPS9109	COVER, REAR CONSOLE, TPS, BLACK	1
3	RT0136BK	COVER, WIRE, BLACK	1
4	RT0137	PHCS, M3X12 - SCI4-12, BK	2
5	PS0035	SCREW, M5XP0.8X15MM SCA5-15	9
6	TPS9501	TRIM, MOTOR HOOD, LEFT, BLACK	1
7	TPS9502	TRIM, MOTOR HOOD, RIGHT, BLACK	1
8	TPS9500	COVER, MOTOR, BLACK	1

A. Secure the rear console cover to the console mast.

B. Attach the wire cover to the upper assembly.

C. Attach the motor cover.

D. Using the previously removed nine (9) screws, secure the motor cover and pedestal covers to the frame.

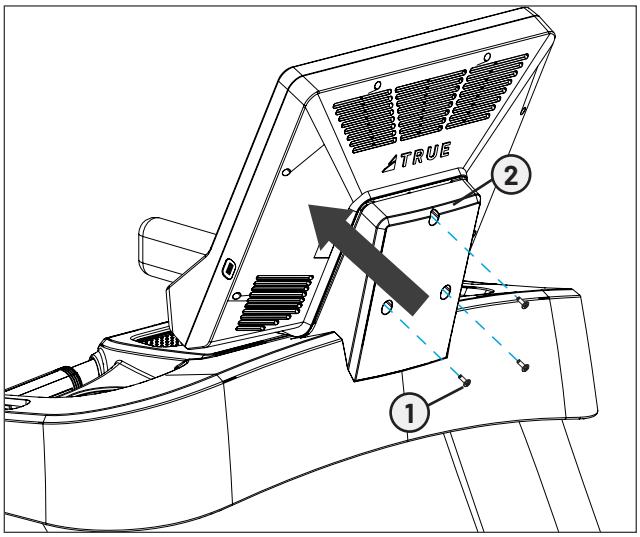

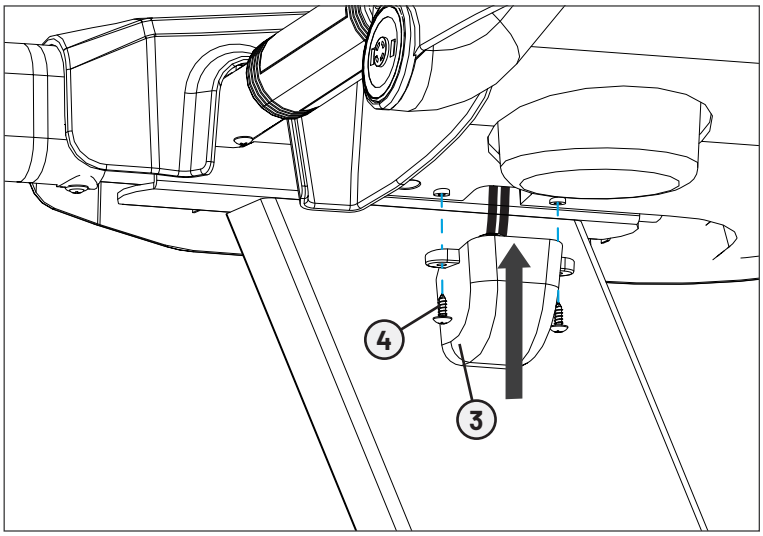

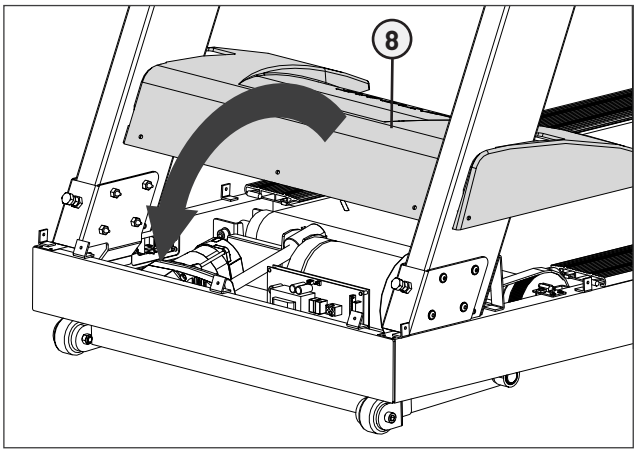

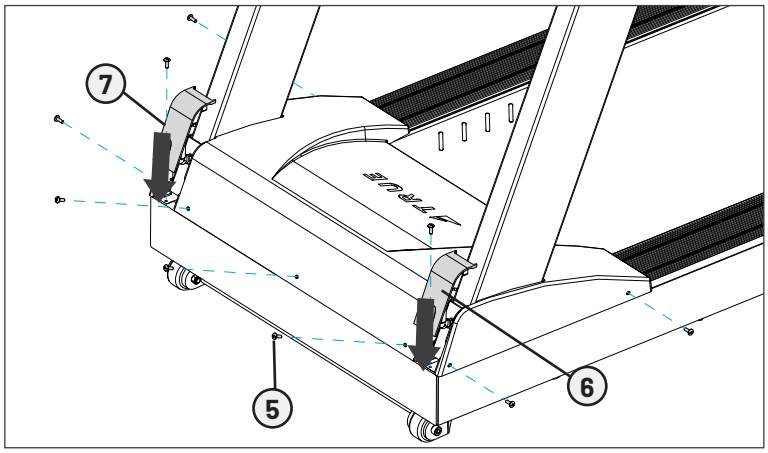

Step 8—Attach the Safety Key

Tools Used in this Step	
#2 Phillips Screwdriver	

A. Remove the safety key from the hardware kit.
B. Attach safety key magnet to front of the treadmill.
C. Use the screw on the upper assembly bottom cover to tether the safety key to the treadmill.

IMPORTANT!

- Read the entire Owner's Manual before attempting any workout.
- Attach clip to user's clothing at the beginning of any workout.
- Remove safety key from treadmill after each use.

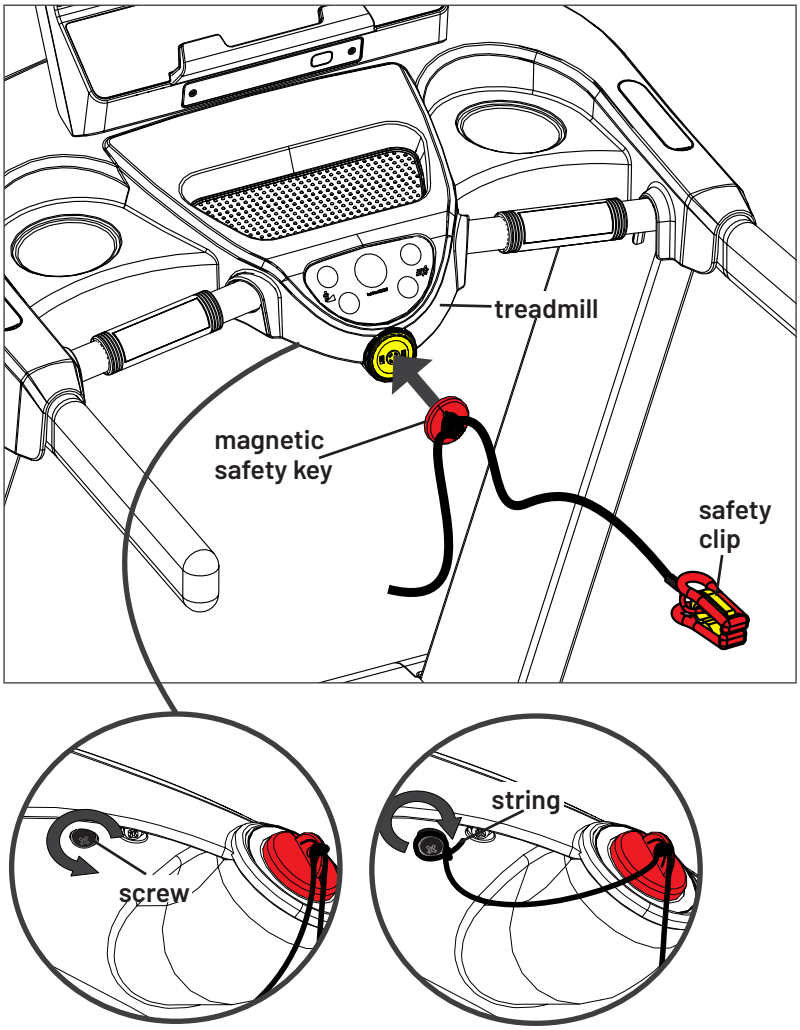

Step 9—Level the Treadmill

A. Verify the treadmill is resting on the floor and not on any packaging materials.
B. Use the wing nuts on the leveling feet to adjust the feet until the treadmill is level.
C. Once the treadmill is level, fully tighten both wing nuts.

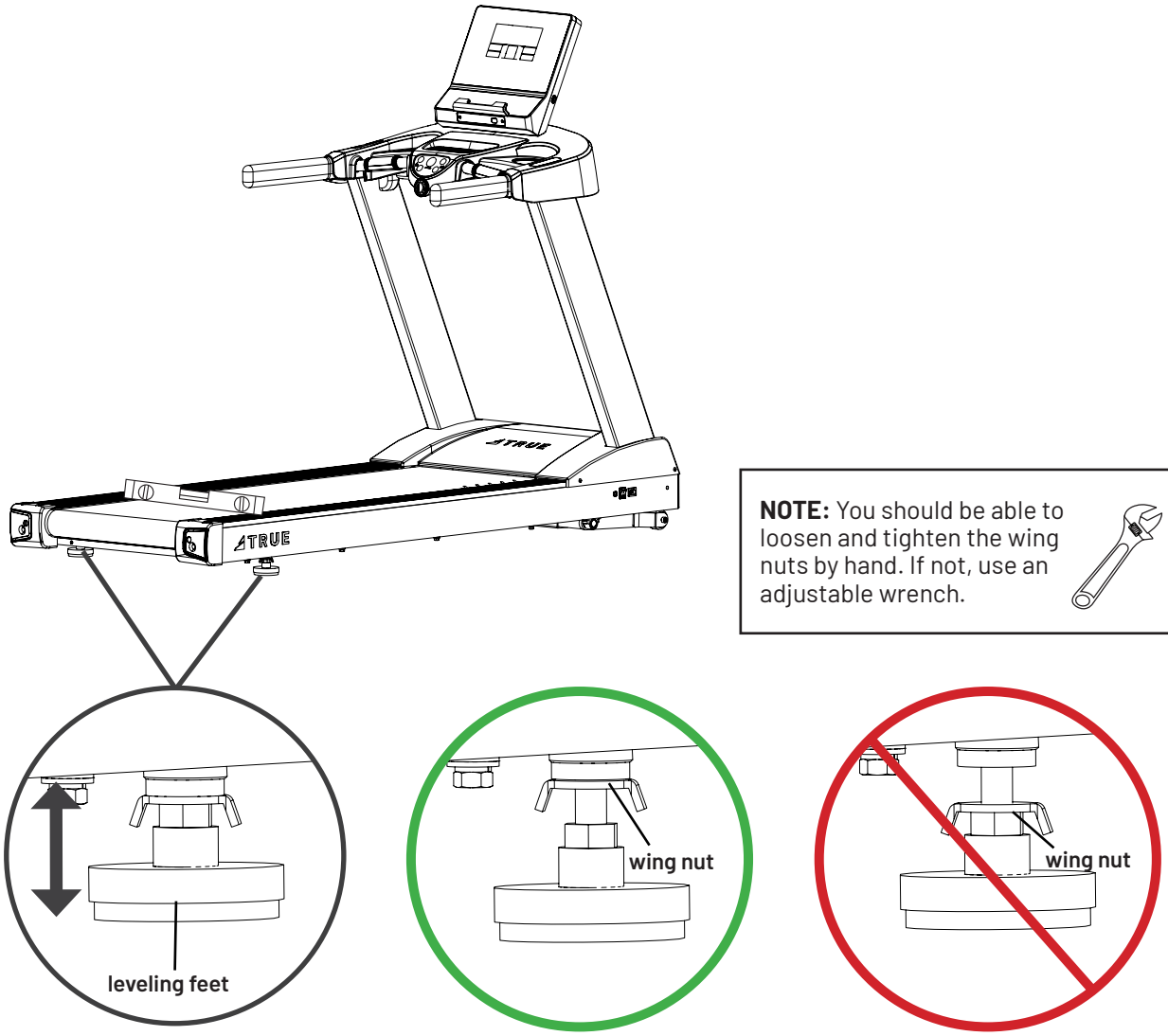

NOTE: You should be able to loosen and tighten the wing nuts by hand. If not, use an adjustable wrench.

TRUE FITNESS

PRODUCT FEATURES

BASE OVERVIEW

Console Assembly—The console allows the user to set up a workout program and control the treadmill during a workout.

Contact Heart Rate Grips—Allows the user to check their heart rate without wearing a wireless chest strap.
NOTE: For increased safety and accuracy, this feature should only be used when the belt speed is below 4 mph.

Safety Key (E-STOP)—A tethered safety device designed to attach to both the user and the treadmill console. Removal of the key from the console will stop belt motion to prevent injury in an emergency.
NOTE: The safety key must be in place on the treadmill, and should be attached to the user's clothing. The treadmill will not operate if the safety key is not attached to the treadmill.

Soft System® Belt—The moving surface of the treadmill on which the user walks or runs. The Soft System® belt decreases the impact on joints.

Straddle Covers—Stationary covers on either side of the belt, which allows the user to safely straddle the belt during startup or in the event of an emergency.

Belt Adjustment Bolts—An adjustment system that allows the users to adjust the belt tracking and tension as needed.

ON/OFF Switch—Allows users to turn power on or off to the treadmill.

Circuit Breaker—A safety device designed to protect the treadmill from excessive electrical current.

Power Cord Inlet—Where the power cord plugs in to the treadmill to receive power from the wall outlet.

Leveling Feet—An adjustable system used to level the treadmill.

***Adjustable Soft Select—**Customizable deck cushioning. Available on the TPS8000 only.

CONSOLE OPTIONS

22" Touchscreen

16" Touchscreen

10" Touchscreen

NOTE: Touchscreen consoles require the use of the auxiliary power supply (P/N 00595500).

9" Touchscreen

8.5" LCD

CARE AND MAINTENANCE

It is important to perform the minor maintenance tasks described in this section. Failure to maintain the treadmill as described here could void the TRUE Warranty. To reduce the risk of electrical shock, always unplug the unit from its power source before cleaning or performing any maintenance tasks.

INSPECTION

TRUE is not responsible for performing or scheduling regular maintenance or inspections. Users should inspect the treadmill daily. Check for worn, frayed or missing safety lanyards. Replace missing or worn safety lanyards immediately. Do not exercise on the treadmill without attaching the safety clip to your clothing. Look and listen for slipping belts, loose fasteners, unusual noises, worn or frayed power cords, and any other indications that the equipment may be in need of service. If any of these are noticed, obtain service. Do not attempt to use the treadmill until proper service has been performed or damaged parts have been replaced.

IMPORTANT! If you determine that the treadmill needs service, make sure that the treadmill cannot be used inadvertently. Turn the unit off, and then unplug the power cord from its power source. Remove the magnetic safety key and safety clip and store it in a safe place. Make sure other users know that the treadmill needs service.

To order parts or request service from a TRUE authorized service provider, please contact TRUE product support:

- www.truefitness.com
- 800.883.8783
- service@truefitness.com

CLEANING THE EQUIPMENT

AFTER EACH USE

- **Wipe Exposed Surfaces—**Use GymWipes™ Antibacterial wipes or spray a solution of 30 parts water to 1 part mild detergent to dampen a soft cloth and wipe all exposed surfaces.
- **Wipe Console—**Use an LCD/screen cleaner or spray a solution of 1 part 91% isopropyl alcohol and 1 part water to dampen a soft cloth and wipe the surface of the console. This helps remove fingerprints, dust, and dirt.

WEEKLY

- **Vacuum—**Use a vacuum to remove any dust or dirt that might have accumulated under or around the treadmill, any motor cover vents, and under the straddle covers. Clogged air vents can prevent adequate cooling to the drive motor, incline motor, and motor control board causing a shortened life.
- **Inspect Belt—**Check for proper running belt alignment and tension. If running belt adjustment is required, please see the following pages for how to adjust.

⚠CAUTION:

Do not use any acidic cleaners. Doing so will weaken the paint or powder coatings and may void the TRUE Warranty. Never pour water or spray liquids on any part of the treadmill. Allow the treadmill to dry completely before using. Frequently vacuum the floor underneath the unit to prevent the accumulation of dust and dirt, which can affect the smooth operation of the unit. Use a soft nylon scrub brush to clean the running belt. Do not clean directly underneath the tread belt. Most of the working mechanisms are protected inside the motor cover and base of the treadmill. However, for efficient operation, the treadmill relies on low friction. To keep the friction low, the unit's running belt, staging platforms, and internal mechanisms must be as clean as possible.

LEVELING THE TREADMILL

The treadmill has adjustable rear leveling feet. Make sure that the running surface is level. If the treadmill is placed on an uneven surface, adjusting the rear feet can help, but may not completely compensate for extremely uneven surfaces.

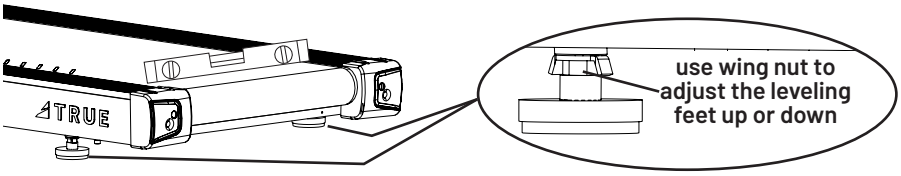

NOTE: You should be able to loosen and tighten the wing nuts by hand. If not, use an adjustable wrench.

ADJUSTING THE EQUIPMENT

RUNNING BELT ALIGNMENT

Proper belt alignment allows the belt to remain centered and ensures smooth operation. Realigning the belt takes a few simple adjustments. If you are unsure about this procedure, contact TRUE product support:

- www.truefitness.com
- 800.883.8783
- service@truefitness.com

IMPORTANT! Damage to the running belt due to improper belt adjustments is not covered under warranty.

⚠CAUTION:

- Verify the treadmill is level before attempting any belt adjustments. An unstable unit may cause belt misalignment.
- Special care must be taken when aligning the running belt. Turn off the treadmill while adjusting or working near the rear roller. Remove any loose clothing and tie back your hair. Be very careful to keep your fingers and any other object clear of the belt and rollers, especially in front of the roller and behind the deck. The treadmill will not stop immediately if an object becomes caught in the belt or rollers.
- If you hear any chafing or the running belt appears to be getting damaged, stop the running belt immediately by pressing the **STOP** key. Walk around to the rear of the unit and observe the belt for a few minutes. The belt should be centered on the running deck. If the belt drifts off center, you must make adjustments.
- For your safety, use the power switch to turn off the treadmill before making any adjustments. Do not adjust the running belt when someone is standing on the unit.
- Do not turn the adjusting bolt more than ¼ turn at a time. Over tightening the bolt can damage the treadmill and over stretch the belt.

IMPORTANT! Failure to align the belt may cause the belt to tear or fray, which may not be covered under the TRUE Warranty.

To stop the running belt:

A. Press the **STOP** key.

B. Turn the treadmill off.

Tools Used in this Procedure	
8mm T-Handle Allen Wrench	

If the running belt is too far to the right side:

A. Locate the right side belt adjustment bolt in the rear end cap of the treadmill. (To determine left and right, stand at the rear of the treadmill and face the display.)

B. On the right side of the machine, turn the adjustment bolt clockwise ¼ turn.

C. Turn the treadmill on and start the belt at 3 mph (5 kph) keeping off the unit.

D. Allow 2 minutes for the belt to self adjust.

Repeat these steps if additional adjustment is necessary.

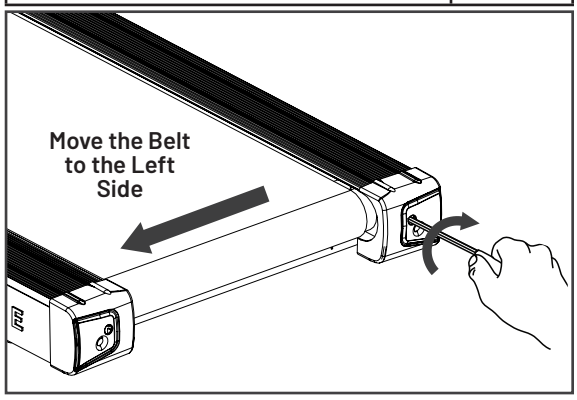

If the running belt is too far to the left side:

A. Locate the left side belt adjustment bolt in the rear end cap of the treadmill. (To determine left and right, stand at the rear of the treadmill and face the display.)

B. On the left side of the machine, turn the adjustment bolt clockwise ¼ turn.

C. Turn the treadmill on and start the belt at 3 mph (5 kph) keeping off the unit.

D. Allow 2 minutes for the belt to self adjust.

Repeat these steps if additional adjustment is necessary.

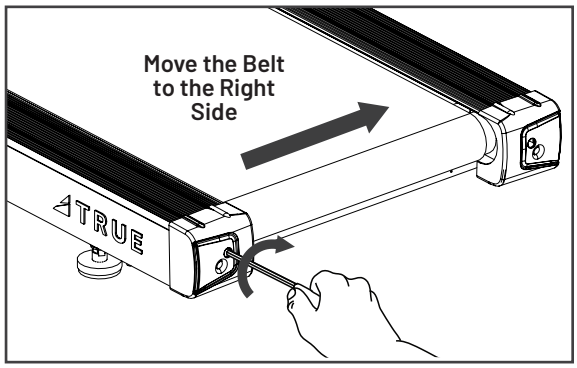

TENSIONING THE RUNNING BELT

If there is a slipping or jerking sensation when running on the treadmill, the running belt may require tightening. In most cases the belt has stretched from use. Tensioning the belt takes a few simple adjustments. If you are unsure about this procedure, contact TRUE product support:

- www.truefitness.com
- 800.883.8783
- service@truefitness.com

IMPORTANT! Damage to the running belt due to improper belt adjustments is not covered under warranty.

⚠CAUTION:

- Verify the treadmill is level before attempting any belt adjustments. An unstable unit may cause belt misalignment.
- Special care must be taken when tensioning the running belt. Turn off the treadmill while adjusting or working near the rear roller. Remove any loose clothing and tie back your hair. Be very careful to keep your fingers and any other object clear of the belt and rollers, especially in front of the roller and behind the deck. The treadmill will not stop immediately if an object becomes caught in the belt or rollers.
- For your safety, use the power switch to turn off the treadmill before making any adjustments. Do not adjust the running belt when someone is standing on the unit.
- Do not turn the adjusting bolt more than ¼ turn at a time. Over tightening the bolt can damage the treadmill and over stretch the belt.
- If you tighten the belt and it still slips, the problem could actually be the drive belt, which is located under the motor cover and connects the motor to the front roller. If the drive belt is loose, it feels similar to the walking belt being loose. Tightening the drive belt should only be done by a trained service person, contact TRUE product support for assistance.

To tension the running belt:

A. Press the **STOP** key.

B. Turn the treadmill off.

C. If the belt needs to be adjusted, locate the adjustment bolts in the rear end caps of the treadmill.

D. On each side of the machine, turn the adjustment bolts clockwise ¼ turn.

E. When both sides are measuring within range, turn the treadmill on and start the belt at 3 mph (5 kph) keeping off the unit.

F. Allow 2 minutes for the belt to self adjust.

G. Check to see if the belt is still slipping.

Repeat these steps if additional tensioning is needed.

Tools Used in this Procedure	
8mm T-Handle Allen Wrench	

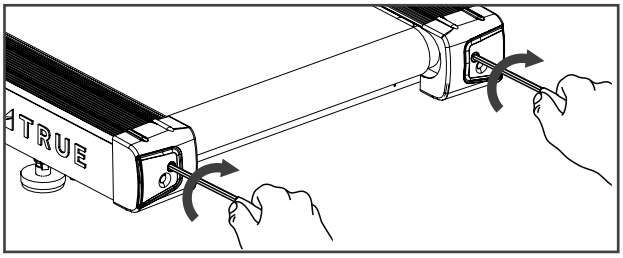

LUBRICATING THE TREADMILL

For optimal performance, TRUE recommends lubricating the treadmill running belt and deck with TRUE lubricant every 200 miles.

To lubricate the deck and belt

A. Press the **STOP** key.
B. Turn the treadmill off.
C. Loosen the belt adjustment bolts in the rear end caps.
D. Lift the belt and apply the lubricant to the center of the deck.
E. Center the belt and re-tension.
See Tensioning the Running Belt for instructions.
F. Walk on the treadmill at 3 mph (5 kph) for approximately one minute to spread the lubricant evenly through the belt and deck.

Please contact your dealer or TRUE product support to obtain the proper lubrication.

Items Used in this Procedure	
8mm T-Handle Allen Wrench	
00349000 TRUE Treadmill Lubrication	

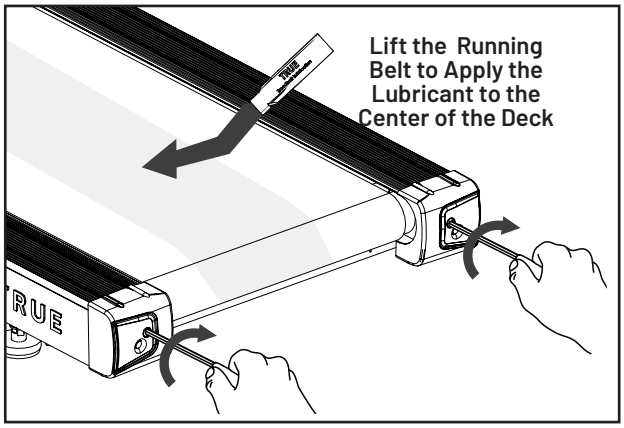

SCHEDULING QUARTERLY PREVENTATIVE MAINTENANCE

TRUE recommends scheduling quarterly preventative maintenance with a qualified service provider. Please contact your dealer or visit www.truefitness.com to contact a local TRUE authorized service provider.

QUARTERLY PREVENTATIVE MAINTENANCE

- Record time, distance, and hours from the console.
- Check error log in console.
- Check running belt and drive belt tension and tracking.
- Remove the motor cover and vacuum any debris out of the drive motor, speed sensor cage, motor control board, and heat sink motor compartment.
- Move treadmill and vacuum underneath.
- Lubricate elevation pivot points including rear stabilizing feet and the lift motor screw.
- Lubricate running belt and deck.
- Inspect all fasteners.
- Inspect all electrical connections.
- Inspect all components for abnormal or premature wear.

⚠**CAUTION:** Only use TRUE authorized service providers. Using non-authorized service providers could void the TRUE Warranty.

LONG TERM STORAGE

When the treadmill is not in use for any length of time, turn it off. Make sure that the power cord is unplugged from the power source and is positioned so that it will not become damaged or interfere with people or other equipment.

CLEANING AND STORING THE CHEST STRAP

Clean the chest strap using a sponge or soft cloth dampened in mild soap and water. Dry the surface thoroughly with a clean towel. Store the chest strap in a place where it remains free of dust and dirt. Be sure to protect the chest strap from extreme temperatures. Do not store it in a place that may be exposed to temperatures below 32° F (0° C).

ADDITIONAL INFORMATION

TROUBLESHOOTING

This troubleshooting information is intended to assist in diagnostics only and is not all inclusive. Technical specifications, error codes, and programming are subject to change without notice. TRUE accepts no liability for any damage or loss suffered by persons whom rely wholly or in part on any description or statement contained within this manual. Please visit www.truefitness.com to obtain the most recent version of all manuals and contact TRUE product support (800-883-8783) for assistance with troubleshooting and diagnostics.

Malfunction	Possible Cause	Corrective Action
No power	A. Unit turned off B. Damaged power cord C. Power cord not fully seated in socket D. No power at outlet E. Tripped circuit breaker	A. Verify the On/Off switch is at the ON position B. Replace power cord C. Inspect power connection at the unit and outlet D. Use a voltmeter to verify power at outlet E. The location of the circuit breaker is next to the On/Off switch—verify the circuit breaker is not open—if the breaker is open, reset it
Unit resets or pauses randomly	A. Damaged power cord B. Power cord not fully seated in socket C. Safety key (E-STOP) not fully engaged D. Insufficient power E. Error code is displayed on console F. Pinched or loose main communication cable G. No User Present displayed on screen	A. Replace power cord B. Inspect power connection at the unit and outlet C. Re-engage the safety key to the console D. Verify output voltage from 20A outlet with a voltmeter E. Contact TRUE product support F. Contact TRUE product support G. User weight must be over 90 lbs—verify No User Present settings in console
Walking belt is off center	A. Uneven floor B. Adjust belt tracking	A. Adjust the treadmill rear leveling feet B. See Aligning the Running Belt
Walking belt hesitates or slips when stepping	A. Adjust belt tension B. Lubricate running belt	A. See Tensioning the Running Belt B. See Lubricating the Treadmill
Rubbing sound from treadmill when in operation	A. Walking belt is rubbing a straddle cover B. Foreign object may be stuck under walking belt C. Foreign object may be stuck in motor compartment D. Roller bearings may be damaged E. Drive motor may be damaged F. Drive belt may be misaligned	A. See Aligning the Running Belt B. Inspect under the unit—remove any object that may be under the unit C. Contact TRUE product support D. Contact TRUE product support E. Contact TRUE product support F. Contact TRUE product support
Heart rate displaying erratically or not displaying	A. Transmitter belt contacts are not making good contact with the skin B. Contacts on the transmitter belt are not moist C. Transmitter belt is not within 3 feet (1 meter) of the heart rate receiver D. The battery inside the transmitter belt is depleted E. Another user wearing a compatible transmitter strap is within 3 foot (1 meter) of the unit F. Environmental interference from high voltage power lines, computers, motor driven appliances, cell/cordless phone, or WiFi router	A. Re-adjust the transmitter belt so that it is in full contact with the skin B. Moisten the contacts on the transmitter belt C. Adjust your position on the treadmill so that you are within 3 feet (1 meter) of the console D. Replace the transmitter belt with a compatible transmitter belt E. Move the units so that there is more space between them F. Move the unit to another position within the room or move the cause of the interference until heart rate reading are stable—if the probable source of interference is plugged into the same outlet move the suspect source to another outlet

Fault Code	Category	Description	Cause	Corrective Action
Fault CN00: Corrupted Console Configuration	Console	Corrupted brainboard configuration / fails integrity check	A. Corrupt software B. Firmware and software versions are not compatible	A. Power cycle machine — Reconfigure console B. Reinstall software/firmware — Contact TRUE product support
Fault CN01: Internal Fault	Console	Math error - software	A. Console configured incorrectly B. Corrupt software	A. Power cycle machine — Reconfigure console B. Reinstall software/firmware — Contact TRUE product support
Fault CN02: Invalid Console Configuration	Console	The product configuration data has failed validation checks (incline ranges make no sense, etc.)	A. Console configured incorrectly B. Incline motor out of range C. Loose cable	A. Power cycle machine — Reconfigure console B. Reinstall software/firmware — contact TRUE product support C. Check cable connections
Fault CN03: Stuck Key	Console	Membrane key stuck down/ closed	Membrane key is damaged	Contact TRUE product support
Fault CN04: Lower Board Comm Fault	Console	Brainboard fails to receive timely communication responses from lower board / Fault after 3 retries	A. Console B. Loose cable C. Motor control board	A. Power cycle machine B. Check cable connections C. Contact TRUE product support
Fault CN05: No Lower Control	Console	No lower board connected to console - detection wires not connected	A. Loose cable B. Console configured incorrectly	A. Power cycle machine — Check cable connections B. Reconfigure console
Fault CN06: Config Mismatch	Console	Console is configured for a product different than that to which it is connected	Console configured incorrectly	Power cycle machine — Reconfigure console
Fault CN07: Calibration Timeout	Console	Incline calibration was not able to complete within allowed time	Low AC Line Voltage	Retry calibration — Verify AC voltage at outlet
Fault CN08: Calibration Failed — Lower Limit NotReached	Console	During incline calibration, the incline stalled before reaching what should be the lower limit	A. Console displays Fault Calibration not saved. Incline disabled. B. Incline potentiometer value out of range	A. Power cycle machine — Check cable connections — Run incline calibration B. Contact TRUE product support
Fault CN09: Insert Safety Key	Console	Emergency circuit opened	A. Safety key not engaged B. Loose cable C. Switch damaged	A. Re-insert safety key B. Check cable connections C. Contact TRUE product support
Fault CN10: E-Stop Fault	Console	A test of the emergency circuit has failed	A. Console Catch B. Safety Key not engaged C. Loose Cable D. Switch Damaged	A. Power cycle machine B. Re-insert safety key C. Check cable connections D. Contact TRUE product support
Fault CN24: BB Comm Fault	Console	SBC cannot communicate with brainboard	Console	Power cycle machine — Contact TRUE product support
Fault CN25: Firmware Mismatch	Console	Firmware on brainboard not compatible with SBC software	A. Corrupt software B. Firmware and software versions are not compatible	A. Power cycle machine — Reconfigure console B. Reinstall software/firmware — Contact TRUE product support

Fault Code	Category	Description	Cause	Corrective Action
Fault SP01: Belt Under Speed	Speed	Tread motor rpm is below target rpm	A. High belt/deck friction B. High belt tension C. Low line voltage D. Dirty or misaligned speed sensor	A. Lubricate tread belt — Contact TRUE product support B. Check drive belt and walking belt tension C. Contact TRUE product support D. Contact TRUE product support
Fault SP02: Belt Over Speed	Speed	Tread motor rpm is higher than target rpm	A. High belt/deck friction B. Line voltage C. Dirty or misaligned speed sensor	A. Lubricate tread belt — Contact TRUE product support B. Check AC line voltage C. Contact TRUE product support
Fault SP03: Belt Over Accel	Speed	Tread belt speed increasing too quickly	A. User is holding belt back B. High belt/deck friction C. Dirty or misaligned speed sensor	A. Do not try to stop belt B. Lubricate tread belt C. Contact TRUE product support
Fault SP04: No Speed Signal	Speed	Speed sensor is not providing speed data	A. Dirty or misaligned speed sensor B. High belt/deck friction C. Low line voltage	A. Contact TRUE product support B. Lubricate tread belt — Contact TRUE product support C. Check AC line voltage
Fault IN01: Incline Stall	Incline	Incline not moving when commanded	A. Console displays Fault Calibration not saved. Incline disabled. B. Incline potentiometer value out of range	A. Power cycle machine — Check cable connections — Run incline calibration B. Contact TRUE product support
Fault IN02: Incline Out of Range	Incline	Incline value is out of the calibrated range - does not occur during calibration	A. Console displays Fault Calibration not saved. Incline disabled. B. Incline potentiometer value out of range	A. Power cycle machine — Check cable connections — Run incline calibration B. Contact TRUE product support
Fault IN03: Incline Run Fault	Incline	Incline moving when not commanded	A. Console displays Fault Calibration not saved. Incline disabled. B. Incline Potentiometer value out of range	A. Power cycle machine — Check cable connections — Run incline calibration B. Contact TRUE product support
Fault IN04: Incline Max/Min	Incline	Incline value is out of expected operating range -may indicate that it is disconnected.	A. Console displays Fault Calibration not saved. Incline disabled. B. Incline potentiometer value out of range	A. Power cycle machine — Check cable connections — Run incline calibration B. Contact TRUE product support

WIRING DIAGRAM

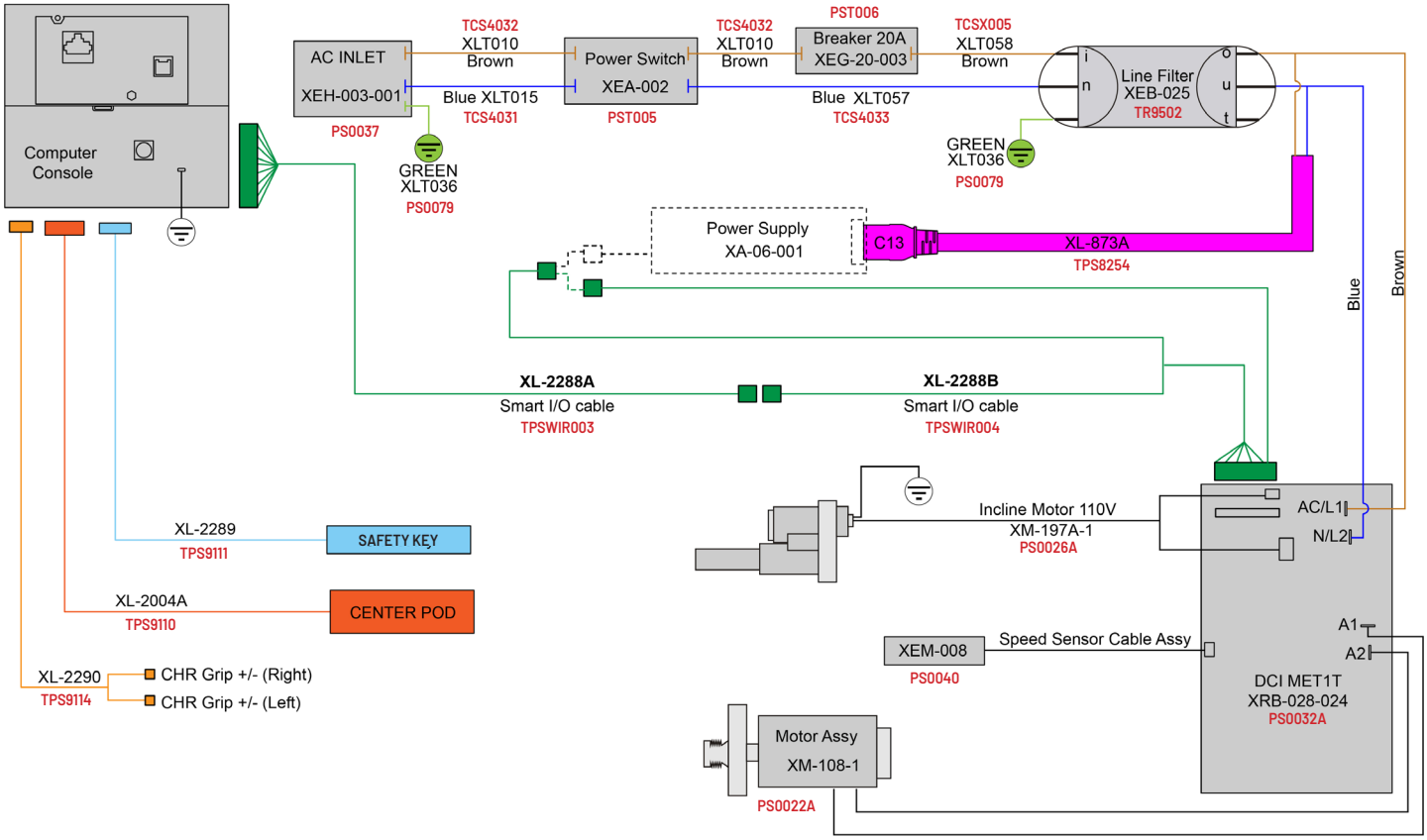

TRUE FITNESS

ATTENTION OWNER'S: **To ensure you get the most out of your purchase and receive the full benefits of our warranty, you must register your product within 45 days of purchaser's receipt of this product.**

WARRANTY

LIMITED WARRANTY

Performance 1001 Residential Limited Warranty

WARRANTY ITEM	DURATION
Frame*	25 Years (with registration)
Parts	
Drive Motor	25 Years (with registration)
Electrical and Mechanical	7 Years
8.5" LCD Console	5 Years
9" Touchscreen Console	5 Years
10" 16" 22" Touchscreen Consoles	3 Years
Wear Items***	90 Days
Labor**	
Electrical, Mechanical, Console, Drive Motor, and Frame	1 Year (with registration)
Wear Items***	90 Days

Performance 3001 Residential Limited Warranty

WARRANTY ITEM	DURATION
Frame*	25 Years (with registration)
Parts	
Drive Motor	25 Years (with registration)
Electrical and Mechanical	7 Years
8.5" LCD Console	5 Years
9" Touchscreen Console	5 Years
10" 16" 22" Touchscreen Consoles	3 Years
Wear Items***	90 Days
Labor**	
Electrical, Mechanical, Console, Drive Motor, and Frame	1 Year (with registration)
Wear Items***	90 Days

Performance 8001 Residential Limited Warranty

WARRANTY ITEM	DURATION
Frame*	25 Years (with registration)
Parts	
Drive Motor	25 Years (with registration)
Electrical and Mechanical	10 Years
8.5" LCD Console	5 Years
9" Touchscreen	5 Years
10" 16" 22" Touchscreen Consoles	3 Years
Wear Items***	90 Days
Labor**	
Electrical, Mechanical, Console, Drive Motor, and Frame	1 Year (with registration)
Wear Items***	90 Days

ATTENTION OWNER'S: **To ensure you get the most out of your purchase and receive the full benefits of our warranty, you must register your product within 45 days of purchaser's receipt of this product.**

WARRANTY DETAILS

Warranty does not cover damage or equipment failure resulting from or caused by improper assembly/installation, accident, misuse, abuse, unauthorized modification, or failure to provide reasonable and necessary maintenance.

*Frame is the serialized base of the unit and does not include paint or coatings. Frame warranty will equal that of parts warranty unless, within 45 days of purchaser's receipt of this Product (A) the warranty is registered on-line or (B) if the form provided with equipment is filled in, signed by the original purchaser, and mailed to TRUE. If a valid receipt is not available, the Limited Frame Warranty period begins from the date of manufacture on the originally purchased equipment.

**Drive Motor warranty will equal that of parts warranty unless, within 45 days of purchaser's receipt of this Product (A) the warranty is registered on-line or (B) if the form provided with equipment is filled in, signed by the original purchaser, and mailed to TRUE. If a valid receipt is not available, the Limited Drive Motor Warranty period begins from the date of manufacture on the originally purchased equipment.

***Labor warranty is available for equipment located within United States. TRUE Fitness equipment is automatically covered under a 6-month Limited Labor Warranty. This 6-month Limited Labor Warranty begins from the date of purchase shown by a valid receipt. If a valid receipt is not available, the 6-month Limited Labor Warranty period begins from the date of manufacture on the originally purchased equipment.

****Wear Items include: batteries, covers, caps, badges, paint, pedal straps, toe clips, elliptical pedal inserts, foot pads, Coax/TV, HDMI, USB, mirroring or Ethernet connections, and safety key.

All TRUE Fitness products are distributed by TRUE and are warranted to the original product purchaser and the parts of the TRUE product (the "Product") listed below. During the applicable Warranty Period, the Product, under normal use and service, shall be free of manufacturing defects in workmanship and materials.

NOTE:

- Standard shipping is included with warranty part replacement.
- Shipping for warranty frame or replacement is included for the period of three years from the original date of purchase.

All Warranty Items are "LIMITED"

- This limited warranty does not cover damage or equipment failure resulting from or caused by improper assembly/installation, failure to follow instructions and warnings in owner's manual, accident, misuse, abuse, unauthorized modification, failure to provide reasonable and necessary maintenance, software version upgrades, compatibility with third party/aftermarket hardware, software, applications, or websites.
- TRUE's liability shall under no circumstances exceed the actual amount paid by you for the product, nor shall TRUE under any circumstances be liable for any consequential, incidental, special or punitive damages or losses, whether direct or indirect.
- Some states or countries do not allow the exclusion or limitation of incidental or consequential damages, so the above limitation or exclusion may not apply to you.
- TRUE will neither assume nor authorize any person to assure for us any other obligation or liability concerning the sale of this Product. Under no circumstances shall TRUE be liable under this warranty, or otherwise, of any damage to any person or property, including any lost profits or lost savings, for any special, indirect, secondary, incidental, or consequential damages arising out of the use of or inability to use this Product.
- This limited warranty, which is given expressly and in lieu of all other express warranties, constitutes the only warranty made by TRUE.
- The remedies described herein are your sole and exclusive remedies and TRUE's entire liability for any breach of this limited warranty.
- No one is authorized to change, modify, or extend the terms of this limited warranty.
- This limited warranty is in lieu of all other warranties of any kind either expressed or including but not limited to implied warranties of merchant.
- This limited warranty applies to the product only while the product remains in the possession of the original purchaser and is not transferable.
- This limited warranty becomes VALID ONLY if the Product is initially assembled/installed by a TRUE authorized dealer/technician (if anyone other than a TRUE authorized dealer/technician initially assembles and installs the Product, this limited warranty will be void unless the written authorization of TRUE is first obtained).
- The "Warranty Period" for this limited warranty shall be for the duration forth in the applicable charts, beginning from the date of original purchase; provided, however, except to the extent prohibited by applicable law, the "Warranty Period" shall only be 6-months for Labor, 7-years for Frame, 7-years for Drive Motor (from the date of original purchase) unless, within 45 days of purchaser's receipt of this Product (A) the warranty is registered on-line or (B) if the form provided with equipment is filled in, signed by the original purchaser, and mailed to TRUE.
- All serial numbers must be intact on the Product for this limited warranty to be valid.
- Installation or download of any 3rd party or after-market products will result in voided warranty. This includes, but is not limited to, electrical and mechanical parts, software, or applications.
- TRUE will ship to an authorized service provider any new or rebuilt replacement part or component, or at our option, replace or refund the Product.
- Replacement parts are warranted for the remaining portion of the original warranty period.
- Proof/receipts of necessary maintenance may be required within 30 days of requested warranty part or service.
- This limited warranty does not apply to the performance of the heart rate accuracy will not be warranted as performance varies, based on user's physiology, age, method of use, and other external factors.

TRUE FITNESS

ATTENTION OWNER'S: **To ensure you get the most out of your purchase and receive the full benefits of our warranty, you must register your product within 45 days of purchaser's receipt of this product.**

WARRANTY REGISTRATION

Thank you for purchasing a TRUE product!

To ensure you get the most out of your purchase and receive the full benefits of our warranty, **you must register your product within 45 days of purchaser's receipt of this product**.

How to register your product:

- **Online:**
  Simply visit our website at truefitness.com and register your product warranty in one simple step.
- **QR Code:**
  Scan the QR code below with your smartphone to be taken directly to the registration page.
- **By Mail:**
  Complete the information below and mail to:
  TRUE Product Support
  865 Hoff Road
  St. Louis, MO 63366

PLEASE RETAIN THIS PORTION FOR YOUR RECORDS
BASE SERIAL NUMBER:
CONSOLE SERIAL NUMBER:

Warranty Registration

Base Serial Number

Console Serial Number (if applicable)

NOTE: Some base units require a console serial number.

Purchase Date

Company (if applicable)

Customer Name (First and Last)

Email Address

Phone Number

Street Address

City

State

Postal Code

Country

TRUE FITNESS

CONTACT US
service@truefitness.com
1.800.883.8783

865 Hoff Road
St. Louis, MO 63366

TRUEFITNESS.COM

MAN-TPS-35 Owner's Manual, Assembly Guide, and Warranty Card
REV07
© 2026 TRUE Fitness All Rights Reserved.